Micro auger doser

for the dosage of powders and granules
from 0,1 ml up to 1 ml

MERZSYSTEM
Verpackungsmaschinen

SD700

- Pharmaceutical industry
- Cosmetics industry
- Food industry
- Chemicals industry

Photo deviating from standard version

Range of products:

POWDERS AND GRANULES
from 0,1 ml - approx.1 ml

Since 1971 Made in Germany

MERZSYSTEM
Verpackungsmaschinen

MERZ Verpackungsmaschinen GmbH · Bahnhofstraße 25 · 35423 Lich, Germany
Telefon +49(0)6404-9172-0 · Telefax +49(0)6404-9172-50
mail@merz-system.de · www.merz-system.de

Micro auger doser
Type: SD700

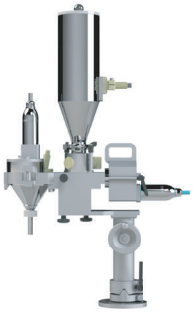

MERZSYSTEM
Verpackungsmaschinen

Description of operation:

The auger dosing unit type SD700 is a vertically operating dosing auger for the dosage of powders and granules (also poor-flowing ones and dust developing products, too).

The exchangeable dosing auger conveys the product through the auger tube, usually directly into a prefabricated bag.

All product-contact parts are made of stainless steel and they constitute materials which are FDA approved.

The number of auger revolutions is adjustable up to 3000 1/min

The dosing unit is driven by means of a servo motor, whose drive shaft is directly connected by its elongation with the dosing auger.

The dosing quantity results from: "flight volume" multiplied by the number of auger rotations per dosing operation.

The auger rotations are freely adjustable.

The dosing unit is equipped with a "horizontal infeed auger", which conveys the product from a product supply or from a storage container into the dosing hopper and which, therefore, decouples the filling of product fluctuations in the storage area. By means of a product level controller, the filling level in the dosing hopper is kept constant. The refill rhythm is adjustable.

Technical Data:

Dosing ranges	from 0,1 ml up to1 ml
Output	up to 140 doses/min
Wattage	approx. 0,4 kW
Voltage supply standard	400V/3/N/PE/50Hz
Protection class	IP 54
Weight	approx. 12 kg
Colour standard	Stainless steal- ALU

Technical Details:

- Constructed in the building block system
- Compact, robust, long-life construction
- For screws from Ø2,5 up to max. Ø8 mm.
- All parts in contact with the product are made of stainless steel - or another approved material
- Infinitely variable servo-drive of auger
- Separate stirrer drive right-hand or, respectively, left-hand rotation switchable
- Quick format change
- Easy to operate
- Low-maintenance
- Quick and easy cleaning
- The machine meets the current CE - guidelines

Options:

- Tendentious control in combination with a weighing machine
- Ventilation and gas flushing of product
- Special sets of dosing augers
- Different systems to close the auger tube, e.g. end cut-off disc for free-flowing products

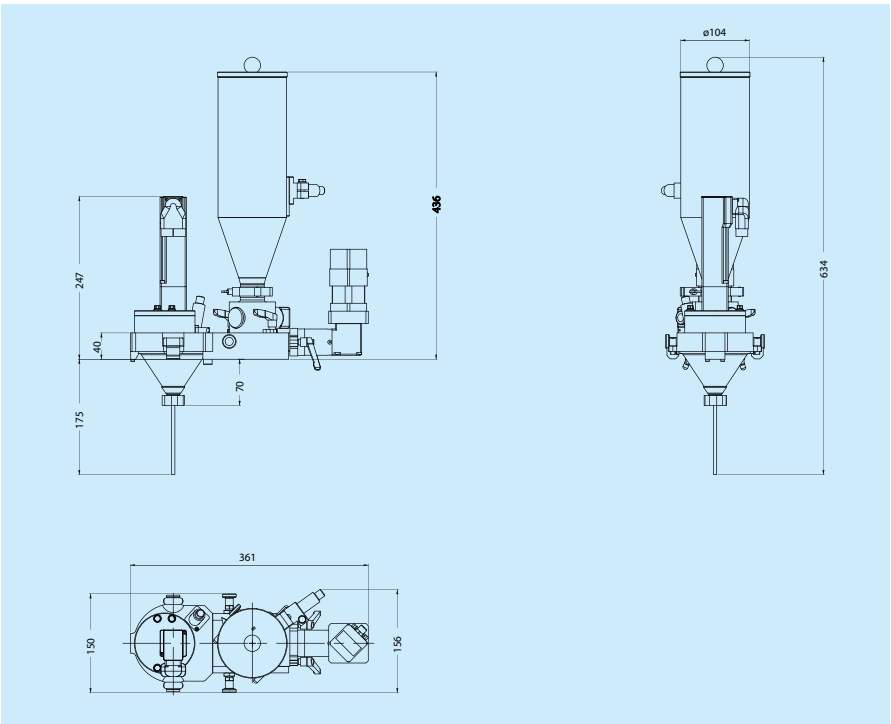

Since 1971 Made in Germany

MERZSYSTEM
Verpackungsmaschinen

MERZ Verpackungsmaschinen GmbH · Bahnhofstraße 25 · 35423 Lich, Germany
Telefon +49(0)6404-9172-0 · Telefax +49(0)6404-9172-50
mail@merz-system.de · www.merz-system.de